IONIX®

MAGNETRON SPUTTERING TECHNOLOGY

IONIX 2“ Magnetron Assemblies
Specifications and reference dwg

THIN FILM CONSULTING

IONIX®

quality · know-how · performance

PLANAR MAGNETRON SPUTTERING SOURCE ION`X-2"HV

›› INTRODUCTION

- 2" target diameter
- DN 25 KF vacuum interface
- mounting on Ø1" or Ø 3/4" tube
- optional magnet array for ferromagnetic targets

IONIX®

quality · know-how · performance

» PRODUCT OVERVIEW

HIGH VACUUM MAGNETRON

ITEM	SIZE	PART NUMBER	DESCRIPTION	VACUUM INTERFACE
1.1	2″Ø	IX2_9041_KF25	• 2″ magnetron with DN 25 KF • targets 2–6 mm thick, threaded anode • discrete target clamp • integrated backing plate • water tubes 6/4 mm • power connector coaxial type • reference drawing IX2_80300	DN 25 KF
		T075_K25_300	• OD 3/4″ tube x 300 mm with DN 25 KF	
		T100_K25_300	• OD 1″ tube x 300 mm with DN 25 KF	

OPTIONS

1.2	2″Ø	IX2_9041-xx	• IX2_9041 with argon injectio4 • 1/8″ or 3 mm tube	DN 25 KF
1.3	2″Ø	IX2_9043-xx	• IX2_904x for ferromagnetic targets • 2 mm Ni, 1 mm Fe	DN 25 KF
1.4	2″Ø	IX2_x0xx_yyyy	• CF or ISO flange mounting on request	

ACCESSORIES

		QC_100_075	• quick coupling for 3/4″ tube and 25.4 mm bore	
		QC_125_100	• quick coupling for 1″ tube and 32 mm bore	
		RD3_5010	• RF- DC-connecting box, 7/16 jack, OD 1″ tube	
		IFL_9400	• ±30° tilt gimbal with DN 25 KF both ends	

2" HV
3" HV
4" HV
6" HV
8" HV
8" HV
10" HV

» SPECIFICATIONS

2" HIGH VACUUM MAGNETRON	
Model No.	**IX2_9041**
Target	
< form	circular/planar
< diameter	2" ± 0.1mm
< thickness	2 mm to 6 mm
< cooling	indirect/direct
Operating pressure	argon
< nonmagnetic targets	3×10^{-3} to 1×10^{-1} mbar
< best performance	5×10^{-3} to 5×10^{-2} mbar
< vacuum sealing	FPM
Electrical specifications	
< max. power, watts DC/ RF	600 W DC / 400 W RF * **
< max. voltage DC	1000 V
< max. current DC	5 A
< rec. power supply	500 W DC / 600 W RF
Power connector	
< DC / RF	7/16 type
Cooling water	
< flow	1 l / (min x kW)
< min. flow	1 l/min
< max. inlet temperature	≤ 30 °C
< max. pressure	≤ 2 bar open drain
< water tubes	Ø 6 x Ø 4 mm PTFE

2" HIGH VACUUM MAGNETRON	
Magnet array	permanent NdFeB
Bakeout temperature	
< max. temperature	60 °C
Magnetron dimensions	
< diameter	81 mm
< height	58 mm
< weight	2 kg
Interface	DN 25 KF
Proposed mounting style	tube Ø1" x 300 mm
Construction materials	stainless steel OFHC - type copper PTFE
Typical rates	
	Al, 8 Å/s, 300 W DC, 100 mm
	Cu, 15 Å/s, 300 W DC, 100 mm
Accessories & Options	
< mounting option	tube Ø 3/4" x 300 mm
< quick coupling feedthrough	for tube Ø 1" and Ø 3/4"
< argon injection	model no. IX2_904x-yy
< power connector	N, HN, HIPIMS tpye
< magnet array for magnetic materials	Fe 1 mm, Ni 2 to 3 mm
< ± 30° tilt	✓
< flange mounting	✓
< SS target clamps for specified thickness	✓
< SS target clamps for bond targets	✓

* This value refers to the magnetron itself. The maximum power is determined by the target material and bonding technique.

** RF-Version requires special connector and installation. More details on request.

PLANAR MAGNETRON SPUTTERING SOURCE
ION'X-2"HV

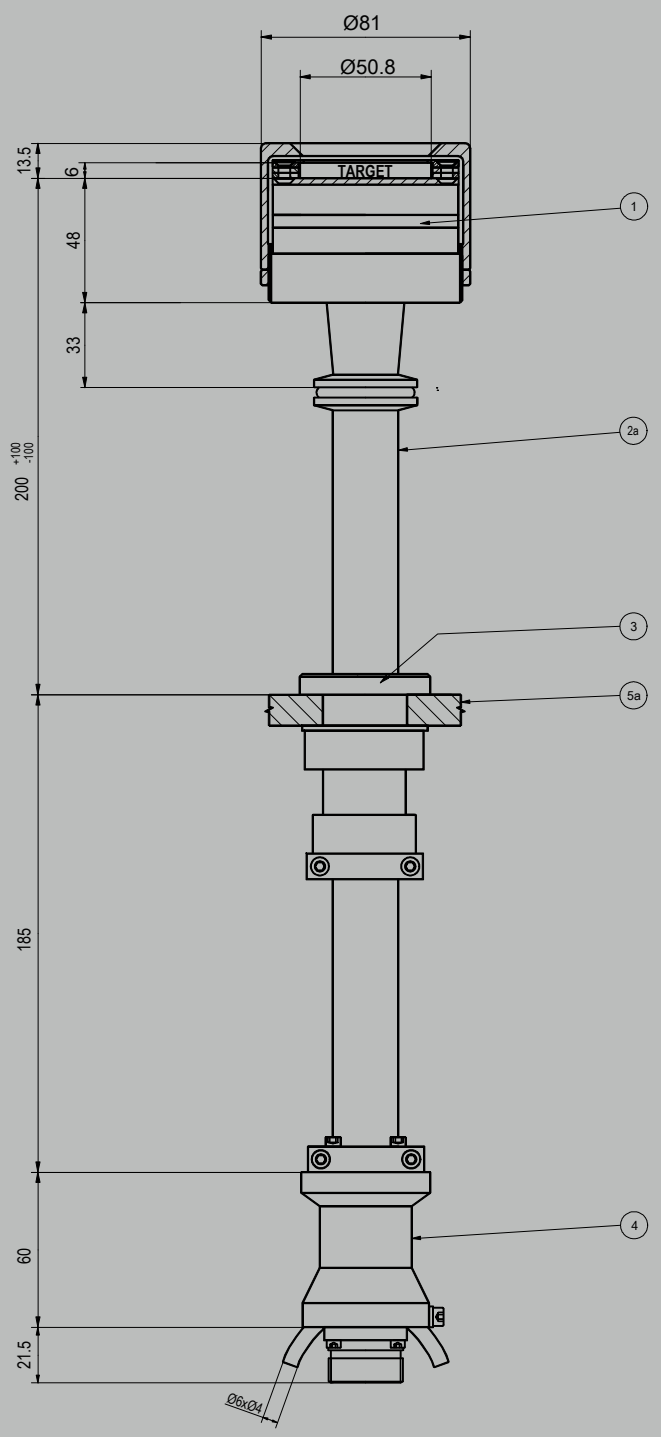

(*) Select magnetron model:

Standard targets (non-magnetic 2 ... 6 mm)
IX2_9041: without chimney
IX2_9042: with chimney
for magnetic targets (Fe 1 mm, Ni 2 ... 3 mm)
IX2_9043: without chimney
IX2_9044: with chimney

ITEM	QTY	PART NUMBER	TITLE
5a			Base plate or chamber wall
4	1	RD3_5010	RF-DC-connecting box with 7/16-jack
3	1	QC126_100	Quick coupling f/t, 1"-tube, 32 mm-bore
2a	1	T100_K25_300	OD 1"-tube with KF25
1	1	IX2_9041 (*)	Planarmagnetron 2", non-magn. targets, chimney (*)

Parts List

UNLESS OTHERWISE SPECIFIED
ALL DIMENSIONS ARE IN MM

SURFACE ROUGHNESS

APPROVALS		DATE
DRAWN	DD	30.04.2015
CHECKED		
CAD FILE	IX2_80300-00	

COMPANY THIN FILM CONSULTING
D-72661 Grafenberg

Magnetron Assembly IONIX-2"
with z-adjust and base plate feedthrough

DWG SCALE 1:1 | DWG NO. IX2_80300-00
DWG SIZE A1 | SHEET 1 OF 1

THIN FILM CONSULTING, proprietary data, company confidential. All rights reserved

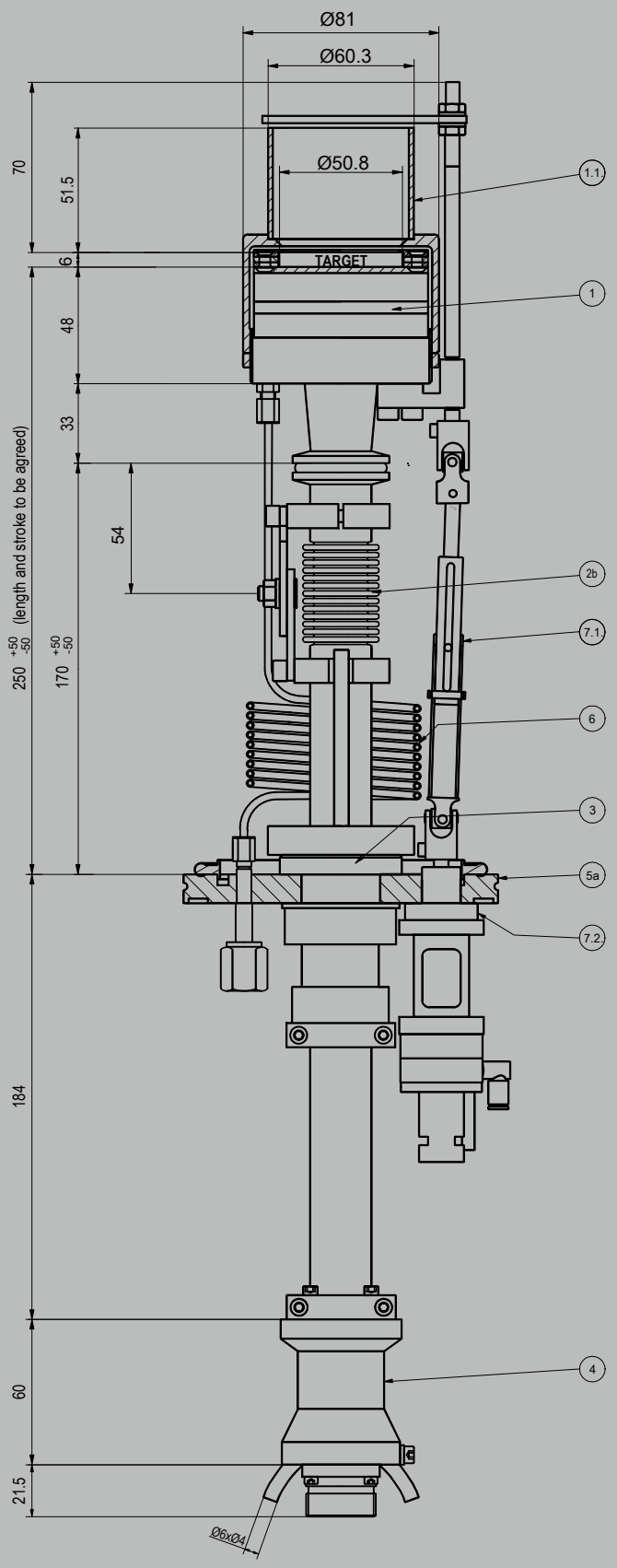

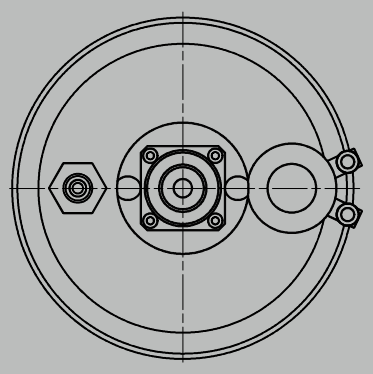

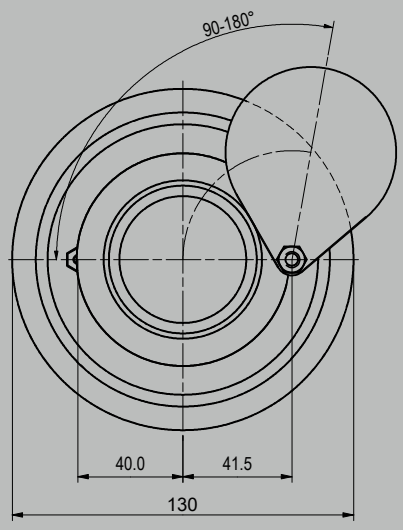

(*) Select magnetron model:

Standard targets (non-magnetic 2 ... 6 mm)
IX2_9041: without chimney
IX2_9042: with chimney
for magnetic targets (Fe 1 mm, Ni 2 ... 3 mm)
IX2_9043: without chimney
IX2_9044: with chimney

ITEM	QTY	PART NUMBER	TITLE
7.2.	1	SH2_5010	Rotary feedthrough
7.1.	1	SH2_502x	Cardan shaft, self-adjusting length, stroke 100 mm
7	1	SH2_9002-2-xx	Pneum. shutter, 90-180° adjustable
6	1	T003_5020-xx	Gas tube, stroke 100 mm
5a	1	ISO100_5010	Flange ISO100-K, gas inlet VCR-4
4	1	RD3_5010	RF-DC-connecting box with 7/16-jack
3	1	QC126_100	Quick coupling f/t, 1"-tube, 32 mm-bore
2b	1	IFL5_9005-xx	±45°-tilt with DN25KF and tube OD 1"
1.1	1	IX2_6120	Chimney, h = 46 mm
1	1	IX2_9042 (*)	Planarmagnetron 2", non-magn. targets, chimney (*)

Parts List

UNLESS OTHERWISE SPECIFIED
ALL DIMENSIONS ARE IN MM

SURFACE ROUGHNESS

APPROVALS		DATE
DRAWN	DD	30.04.2015
CHECKED		
DWG FILE	IX2_8A302-00	

COMPANY THIN FILM CONSULTING
D-72661 Grafenberg

Magnetron Flange Assembly IONIX-2"

with shutter, ±45°-tilt, z-adjust, chimney, gas inlet on ISO100-K

DWG SCALE 1:1 | DWG NO. IX2_8A302-00

DWG SIZE A1 | SHEET 1 OF 1

THIN FILM CONSULTING, proprietary data, company confidential. All rights reserved

_90300

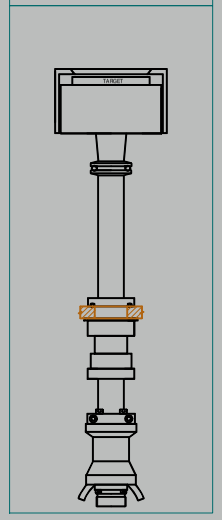

_90303

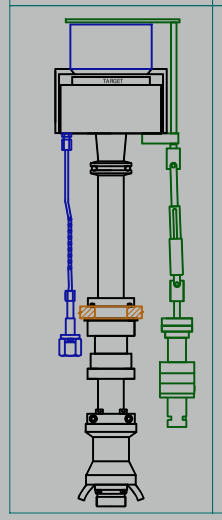

_90304

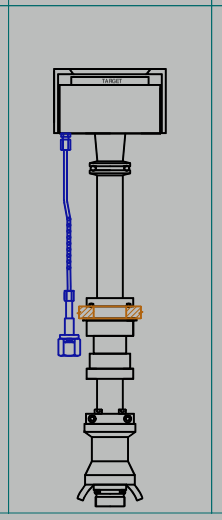

_90305

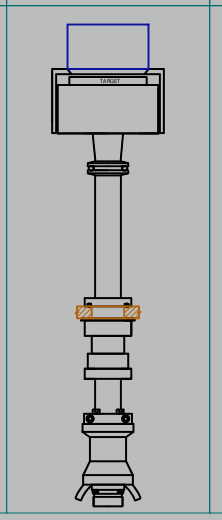

_90306

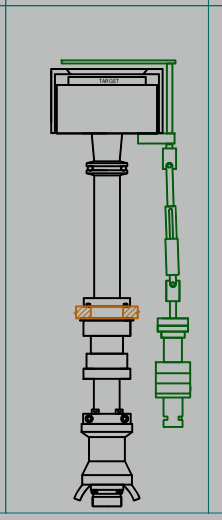

_90307

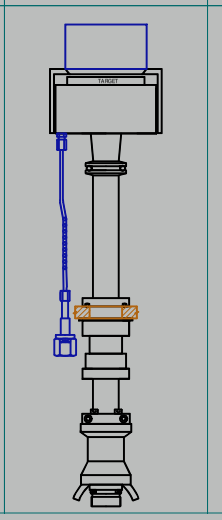

_90308

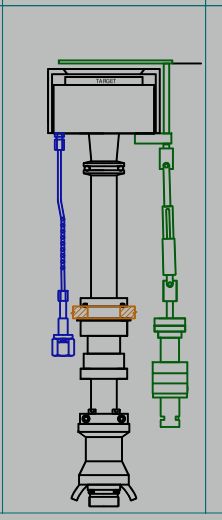

_90309

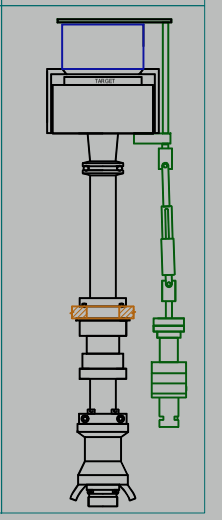

_90301

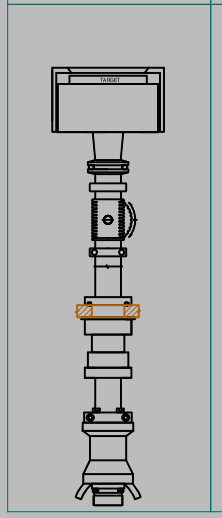

_90302

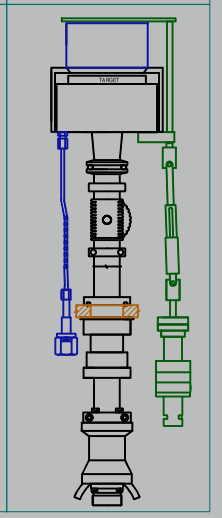

_90314

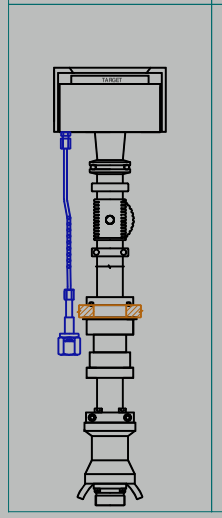

_90315

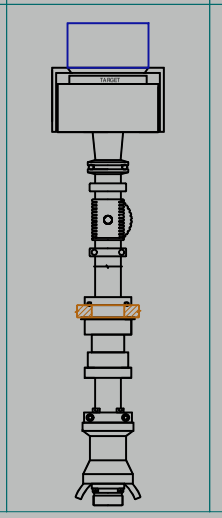

_90316

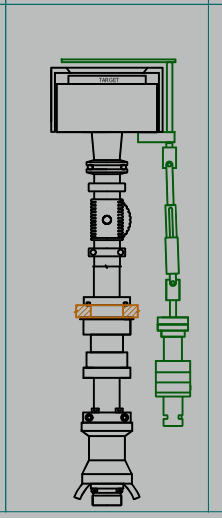

_90317

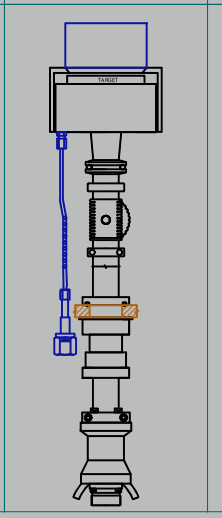

_90318

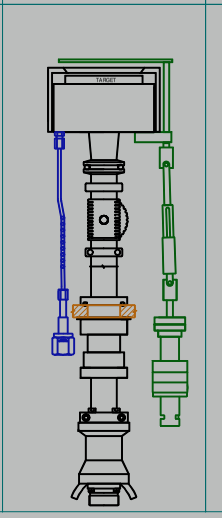

_90319

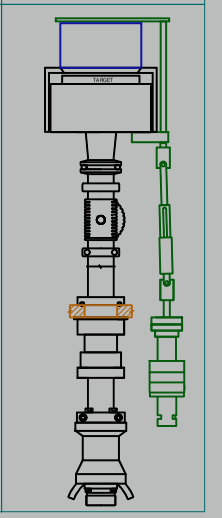

IONIX-Magnetron Assemblies 01/2011

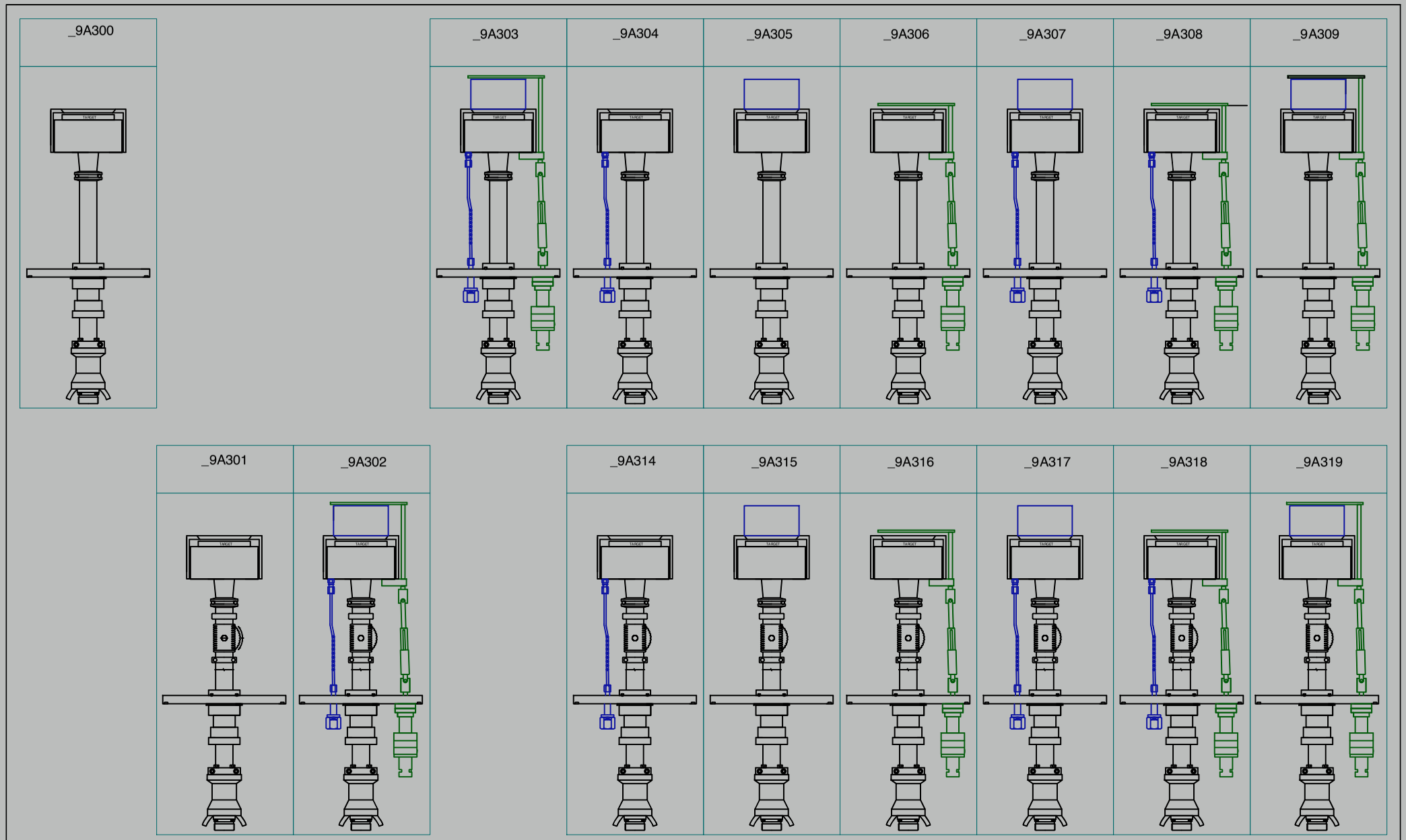

IONIX-Magnetron Flange Assemblies 01/2011